Stellar occultation prediction by rfrench@wellesley.edu Sun Jun 25 10:16:56 2023

target : Jupiter
target radius (km) : 71492.00
C/A epoch : 2031-10-30T05:13:18.000
Event type : Pgt
: Jupiter occs: geocentric, topocentric
: Not a ringed target
Gaia source ID : 4068812842485943424
2Mass ID (if available) : 17441808-2316044

ICRS Star Coord at Epoch: 17h 44m 18.08023s -23:16:04.80201s
RUWE (>1.4 is poor) : 1.00
K magnitude : 8.173
G magnitude : 14.415
RP magnitude : 12.904
BP magnitude : 17.796
DUPflag : 0
Distance (au) : 5.811
f0 (km) : 0.00
g0 (km) : 0.00
skyplane vel. (km/s) : 32.26
Sun-Target sep (deg) : 50.26
Sun-Moon sep (deg) : 128.54
B (ring opening deg) : -2.22
PA of pole (deg) : 0.85
Pole direction: RA (deg): 268.05681
Dec (deg): 64.49652
C/A sky separation (") : 15.600
C/A sky separation (km) : 65751.2
NAIF SPICE kernels : RAJobs_U111+rgf15.spk
URKALLv1.spk
naif0012.tls
nep097.bsp
nep101.bsp
sat440l.bsp

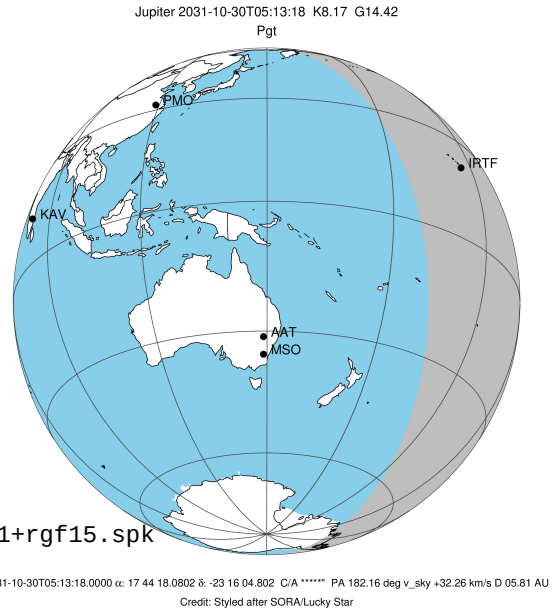

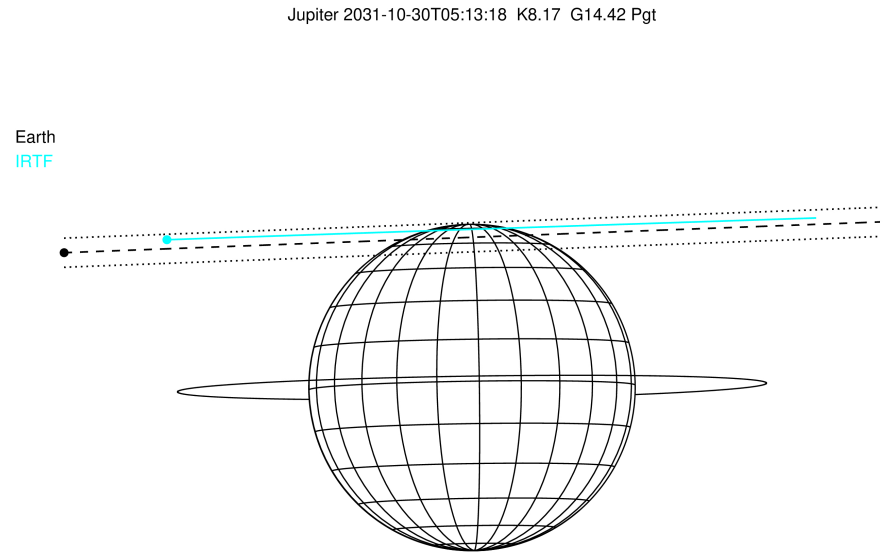

Observable events with sun below -5 deg and altitude above 5 deg

Obs	Location	lat	Elon	Target	Observed Events Interval	OEcode
PIC	Pic du Midi	42.9	0.1			Pnn
PAL	Palomar Mt (200")	33.4	243.1			Pnn
PMO	Purple Mtn Obs. Nanking	32.1	118.8			Pnn
KPNO	Kitt Peak Natl Obs	32.0	248.4			Pnn
MCD	McDonald Obs. 2.7m	30.7	256.0			Pnn
TEN	Teide Obs./Tenerife	28.3	343.5			Pnn
IRTF	Mauna Kea/IRTF	19.8	204.5	+ +	OCT 30 05:06 - OCT 30 05:25	Pie
KAV	Kavalur Observatory	12.6	78.8			Pnn
RIO	Rio de Janeiro	-22.9	316.8			Pnn
ESO	European Southern Obs. (3.6m)	-29.3	289.3			Pnn
AAT	Siding Spring (AAT)	-31.3	149.1			Pnn
SAAO	So. Afr. Astro. Obs. (Sutherland)	-32.4	20.8			Pnn
MSO	Mt. Stromlo Observatory	-35.3	149.0			Pnn

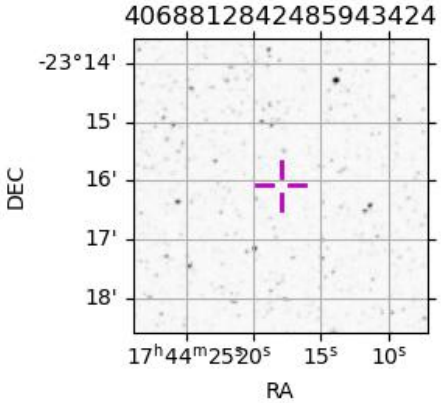

Jupiter_2031-10-30T05_13_18.0000_IRTF.txt
Occultation predictions computed by rfrench@wellesley.edu Sun Jun 11 11:26:32 2023

target : Jupiter
target radius (km) : 71492.00
C/A epoch : 2031-10-30T05:15:56.400
Event type : Pgt
: Jupiter occs: geocentric, topocentric
: Not a ringed target
Observer code : IRTF
Location : Mauna Kea/IRTF
Latitude (deg) : 19.82622
E. Longitude (deg) : 204.52800
Altitude (km) : 4.168
Gaia source ID : 4068812842485943424
2Mass ID (if available) : 17441808-2316044
ICRS Star Coord at Epoch: 17h 44m 18.08023s -23:16:04.80201s
RUWE (>1.4 is poor) : 1.00
K magnitude : 8.173
G magnitude : 14.415
RP magnitude : 12.904
BP magnitude : 17.796
DUPflag : 0
Distance (au) : 5.811
f0 (km) : 0.00
g0 (km) : 0.00
skyplane vel. (km/s) : 32.26
Sun-Target sep (deg) : 50.26
Sun-Moon sep (deg) : 129.27
B (ring opening deg) : -2.22
PA of pole (deg) : 0.85
Pole direction: RA (deg): 268.05681
Dec (deg): 64.49652
C/A sky separation (") : 16.429
C/A sky separation (km) : 69246.6
NAIF SPICE kernels : RAJobs_U111+rgf15.spk
URKALLv1.spk
naif0012.tls
nep097.bsp
nep101.bsp
sat440l.bsp
de440.bsp
earth_720101_070426.bpc
jup365.bsp
ura116.bsp
IAU_SATURN_for_RINGFIT.tpc
pck00010.tpc
earth_200101_990628_predict.bpc
uranus_ringframes_rfrench20220627_v1.tf
neptune_ringframes_rfrench20220702a_v1.tf
earth_flat_IAU.spk

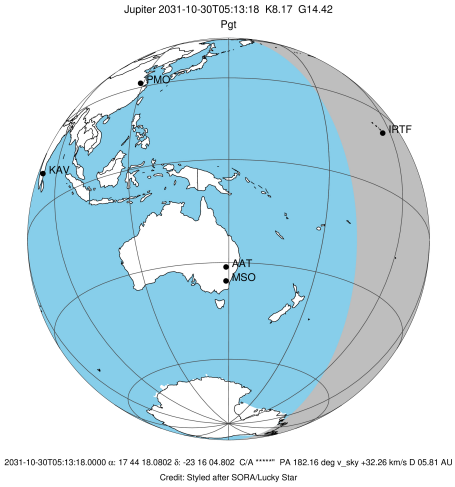

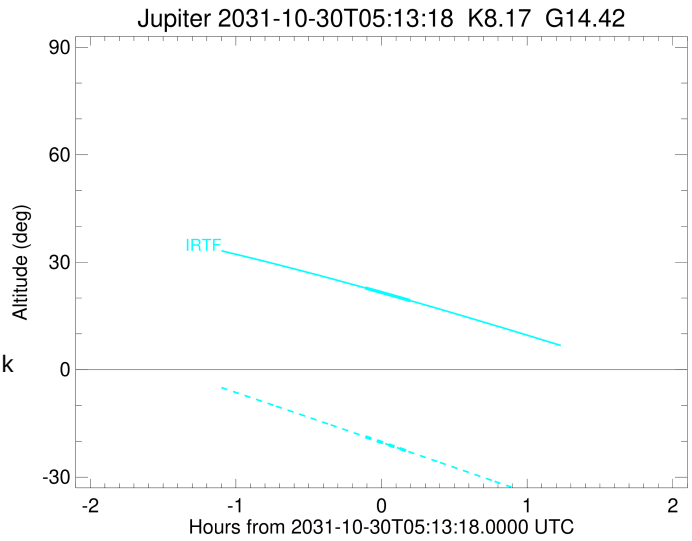

x: target alt < 5.0 deg or sun > -5.0 deg

Target	I/E	UTC	alt	alt-sun	radius	lat-geo	lat-geodetic
Jupiter	I	2031-10-30T05:06:41.456	22.80	-18.73	71485.8	74.40	76.17
Jupiter	E	2031-10-30T05:25:11.030	19.27	-23.04	71485.6	76.50	78.06